ENGINEERING TOMORROW

Data sheet

Multi Ejector Solution™ for R744 (CO_2)

Product type - CTM 1 and CTM 2 Liquid Ejector

Liquid Ejector is a part of the CO2 Adaptive Liquid Management (CALM), Danfoss' solution to handle liquid in all types of transcritical CO2 systems in all climates. Due to higher suction pressure, Liquid Ejector, together with Adaptive Liquid Control (ALC), enables lower energy consumption and better utilization of evaporators, resulting in operational savings. Improved system performance results in fewer or smaller compressors and a minimal suction accumulator.

Liquid Ejector is designed for CO2 transcritical systems to pump the CO2 liquid from the low point in the suction accumulator back to the receiver resulting even in 8 bar pressure lift after mixing with gas coming from the gas cooler.

The Liquid Ejector, AK-PC pack controllers, AK-CC case controllers, and AK-SM system manager comprise the Danfoss CALM.

Features

First Cost savings

- *Lower cost compared to standard booster system due to lower swept volume of compressors (i.e. smaller compressors or less number of compressors).*

Fast Pay Back – Energy saving

- *Improved COP and lower swept volume to the MT compressors , resulting in lower energy consumption*
- *Savings for end users*

- Reliable and robust design
- Fully integrated solution not requiring any additional components like check valves or motorized ball valves
- Fully serviceable - wide range of spare parts and accessories
- Easily accessible strainer / filter for fast maintenance
- Brings first cost savings
  - Enables 5 - 10 % savings on compressor swept volume, compared to standard booster systems
- Fast payback – lower energy consumption
  - Less compressors and higher efficiency on the systems, leads to shorter payback time of less than 2 years on avarage globally
- The combination of CTM 1 and CTM 2 Liquid valve and the Danfoss CALM controllers ensure an easy setup and commissioning, robust control of the system that ensures many years of problem free operation

Approvals

- Pressure Equipment Directive 2014/68/EU (PED)
- UL Recognized

Technical data

Refrigerant:	R744 with oil
Maximum working pressure:	140 bar / 2031 psi
Max. test pressure:	1.43 x 140 bar / 1.43 x 2031 psi
Max. OPD:	90 bar / 1305 psi (for single-voltage coil, 50 Hz)
Min. OPD:	< 0.1 bar / 1.45 psi
Max. pres. dif. E and C connections:	20 bar / 290 psi
Media temp. range:	-10 °C – +50 °C / +14 °F – 122 °F
Ambient temp. range:	-10 °C – +50 °C / +14 °F – 122 °F
Humidity:	0 – 100% R.H. (0-97% R.H. non-condensation condition if IP level is below IPX5)

WARNING!

DISCLAIMER

The **CTM** Multi Ejector valve is approved for use only with Danfoss pack controller type **AK-PC 78x**, **AK-CC 550A** or **AK-CC 750A** and system manager **AK-SM 8xx.**

Danfoss expressly disclaims, and any responsibility or liability, whether based on contract, breach of warranty, tort, statute or otherwise, shall be excluded, if the **CTM** Multi Ejector valve is used with any controller other than a Danfoss controller type **AK-PC 78x, AKCC 550A** or **AK-CC 750A** and **AK-SM 8xx.**

For further information on AK-PC, AK-CC and AK-SM, please see separate document.

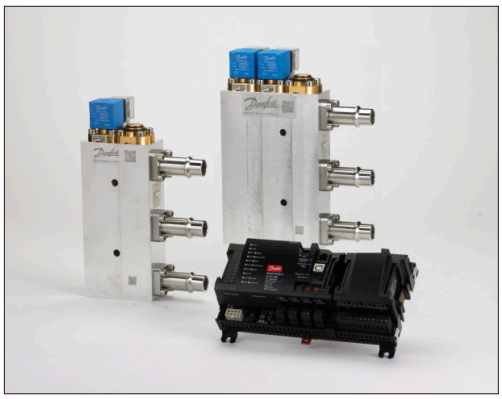

Connector positions

Can be interchanged (see drawing below)

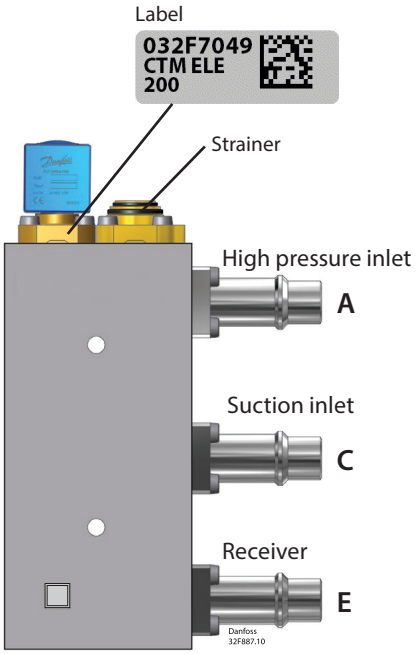

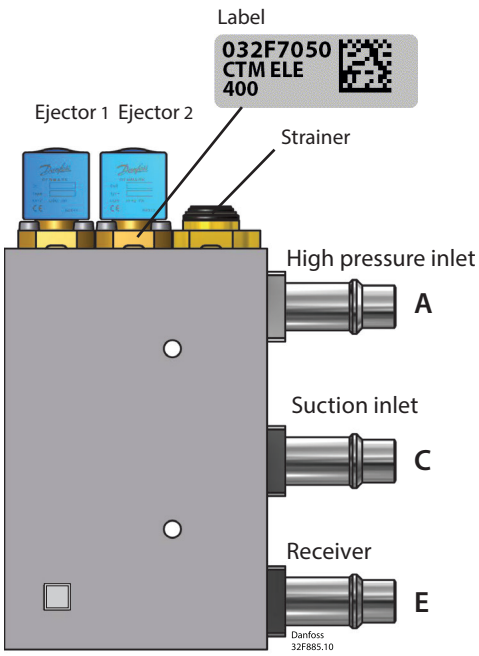

For mounting / service of ejectors

Mounting order of ejectors for CTM 2:
Ejectors with the highest capacities (longest ejectors) must be placed closest to the suction connector C. Any blank ejector should be placed after the ejectors.

A: Gas cooler outlet - Ball valve - inlet connector
Combi brazing $^1/_2$ inch ODF - weld $^5/_8$ inch (EN10220)

C: Suction connector. MT evaporator outlet - Ball valve - suction connector.
Combi brazing $^1/_2$ inch ODF - weld $^5/_8$ inch (EN10220)

E: Common outlet connector - Ball valve - Receiver
Combi brazing $^1/_2$ inch ODF - weld $^5/_8$ inch (EN10220)

Ordering Multi Ejector

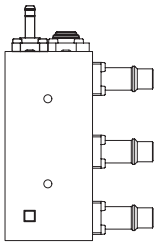

CTM 1

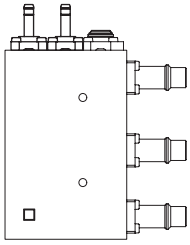

CTM 2

Multi Ejector CTM 1

Type	Capacity - Mass flow [1])	Capacity - Mass flow [2])	Code no. Single pack
	[kg/h]	[lb/h]	
CTM 1 LE 200	200	441	032F5683
CTM 1 LE 400	400	882	032F5684

Multi Ejector CTM 2

Type	Capacity - Mass flow [1])	Capacity - Mass flow [2])	Code no. Single pack
	[kg/h]	[lb/h]	
CTM 2 LE 400	400	882	032F5694
CTM 2 LE 600	600	1323	032F5685
CTM 2 LE 800	800	1764	032F5695

[1]) R744 at 40 bar / 5 °C
[2]) R744 at 580 psi / 40 °F
(LE = Liquid ejector)
(The above code numbers are without coils which should be ordered separately – see coil ordering below).

Approvals (Coils)

AS230CS: LLC CDC TYSK; The Low Voltage Directive 2014/35/EU (LVD); Electromagnetic Compatibility Directive 2014/30/EU (EMC)

AZ120CS: C UR US; LLC CDC TYSK; The Low Voltage Directive 2014/35/EU (LVD); Electromagnetic Compatibility Directive 2014/30/EU (EMC)

Ordering coils / accessories

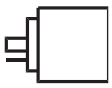

DIN spade connection

Type	Voltage	Frequency / Power consumption				Code no. Single pack
	[V]	[Hz]	[W]	[Hz]	[W]	with DIN plug [1])
AS230CS	230	50	8	60	7	042N7601
AZ120CS	110 - 120	50	8.5	60	7	042N4202

[1]) The three pins on the coil can be fitted with spade tabs, 6.3 mm wide (to DIN 46247). The two current carrying pins can also be fitted with spade tabs, 4.8. mm wide. Max. lead cross section: 1.5 mm².

Voltage variation: V AC -15% - 10%, If DIN plug is used (DIN 43650) the leads must be connected in the socket. The socket is fitted with a Pg 11 screwed entry for 6 – 12 mm.

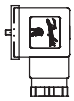

Plug for DIN spade connection

Type	Voltage [V]	Frequency	Code no. Single pack
DIN plug (LED)	230	50 / 60	042N0265 [2])
DIN plug	Max. 250	50 / 60	042N0156

[2]) Only for AS230CS.

Coolselector® 2

Valve sizing using calculation software

It is strongly recommended to use Coolselector® 2 to find the correct valve for your application. The software can be downloaded from the Danfoss website.

You can download it from http://coolselector.danfoss.com

Spare parts

Part	Type	Capacity - HP Mass flow		Description	Code no. Single pack
		[kg/h]	[lb/h]		
Ejectors	CTM ELE 200	200	441	1. Completely assembled ejector with O-rings already mounted	032F9110
	CTM ELE 400	400	882	1. Completely assembled ejector with O-rings already mounted	032F9111

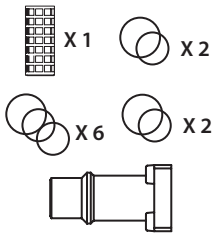

Part	Type	Description	Code no. Single pack
Strainer	CTM strainer	1. Mesh only 2. 2 sets of 2 O-rings	032F9113
O-rings	CTM O-rings	1. 2 sets of 2 O-rings for strainer 2. 6 sets of 3 O-rings for ejectors	032F9114
Connectors	DN 15	Connector + O-ring	032F9115

Design and function

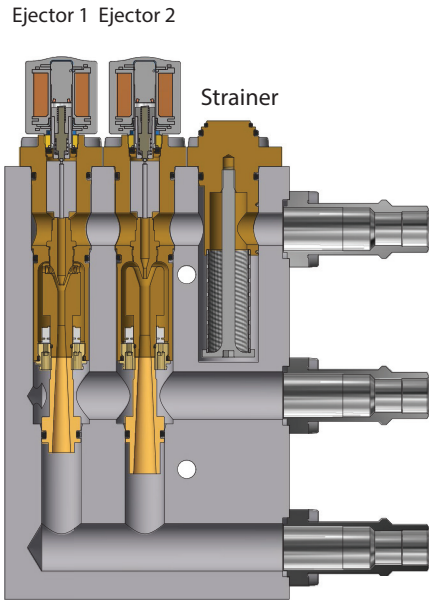

Valve configuration

Type	Code no.	Product name	Ejector 1	Ejector 2
CTM 1	032F5683	CTM Multi Ejector LE 200	CTM ELE 200	-
CTM 1	032F5684	CTM Multi Ejector LE 400	CTM ELE 400	-
CTM 2	032F5694	CTM Multi Ejector LE 400	CTM ELE 200	CTM ELE 200
CTM 2	032F5685	CTM Multi Ejector LE 600	CTM ELE 200	CTM ELE 400
CTM 2	032F5695	CTM Multi Ejector LE 800	CTM ELE 400	CTM ELE 400

Function

The Multi Ejector function is shortly described below.

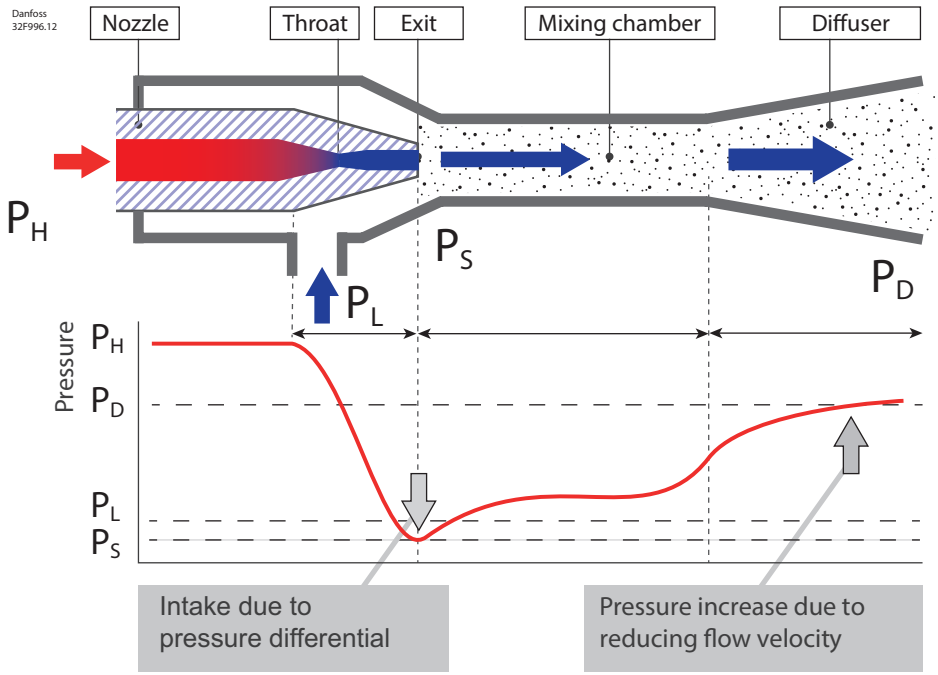

An ejector is a device that uses expansion energy to compress another fluid. In this case with the transcritical system there is up to 20% of the compressor work that can theoretically be recovered in the expansion.

In this case with the Multi Ejector system the work is coming from the CO_2 leaving the gas cooler. The high pressure CO_2 (PH) is entering the nozzle where the expansion is taking place.
At the exit of the nozzle the speed is very high and as a consequence of that the pressure is low.

This low pressure is used to drag liquid from the MT suction accumulator (PL).
From there the two flows are mixed in the mixing chamber where the pressure will be lower than at the drive inlet due to the mixing of vapour from a higher pressure.
After the mixing the flow enters the diffuser where the flow is slowed down. The shape of the diffuser enables the conversion from kinetic energy (velocity) to potential energy (pressure).
After the diffuser the flow is returned to the receiver.

Application

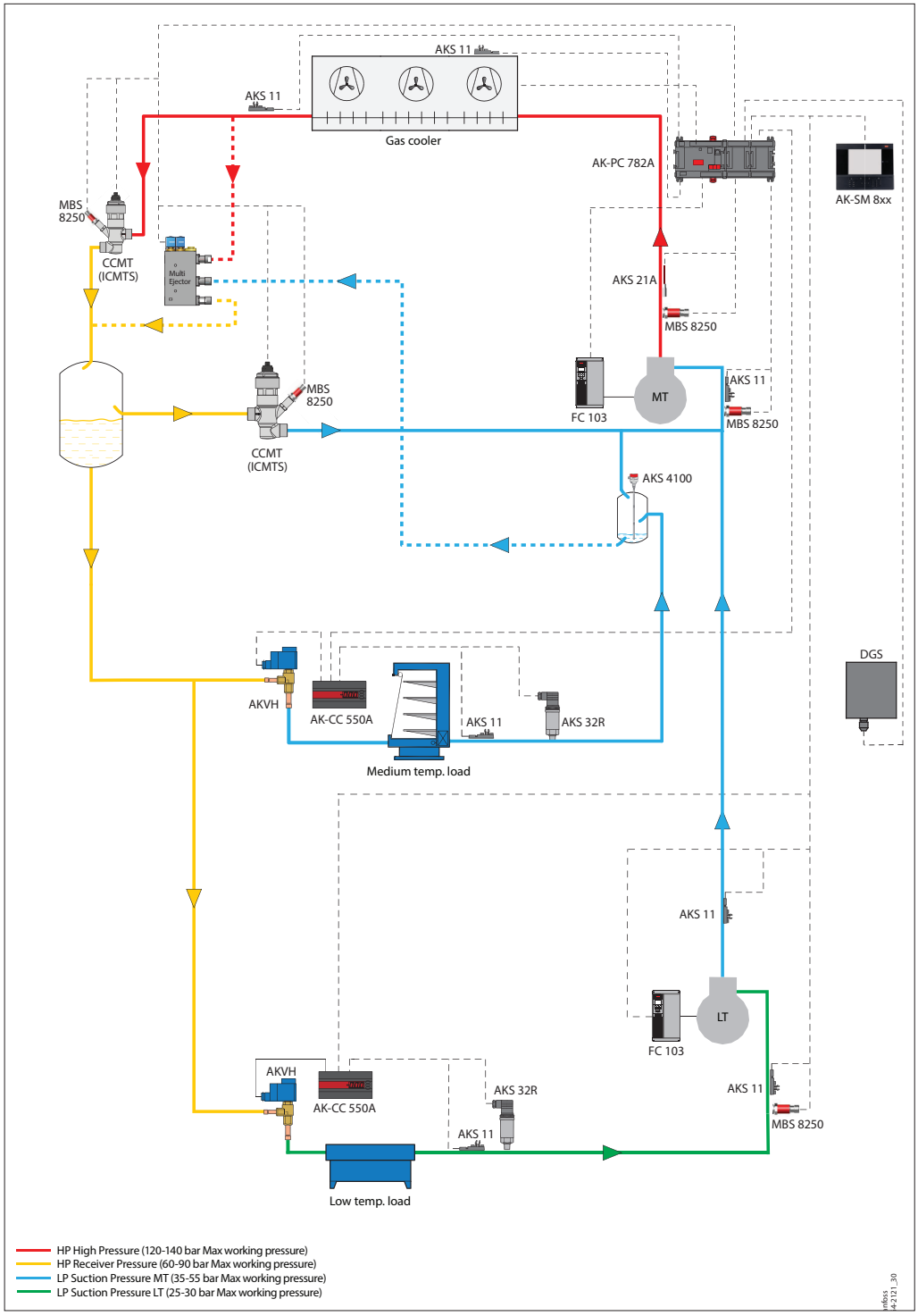

The Multi Ejector is designed to lift a part of the liquid from MT suction and mix it with the gas coming from the gas cooler at medium pressure level.

Danfoss CALM controllers

Pack controller AK-PC 782A

Danfoss offers a wide range of market leading Pack Controllers.
Being the flag ship and best in class controller for transcritical CO_2 packs controls, the AK-PC 782A offers the highest possible efficiency with the Multi Ejector, CTM.
The complete application control features:

- Complete booster pack control of up to 3 suction groups (max. 12 compressors) and high pressure system
- Significant savings with heat recovery for tap water and heat reclaim
- Extensive control of oil flow and pressurization
- Best in class safety monitoring and fail-safe functions
- Minimal energy consumption while ensuring optimal food quality
- Auto-configured, easy-to-use graphical representation with Danfoss System Manager
- Independent, customised control and monitoring of auxiliary function

Case controllers AK-CC 550A and AK-CC 750A

Danfoss AK-CC 550A and AK-CC 750A case controllers manage refrigerated display cases, cold rooms, or refrigeration cabinets. Controlling Electronic Expansion Valves (EEV), they optimize evaporator utilization and energy consumption using the Minimum Stable Superheat (MSS) or new Adaptive Liquid Control (ALC) algorithm, giving you the best possible refrigeration capacity from the energy consumed and ensuring food safety.

AK-SM 8xx system manager

The Danfoss AK-System Manager (AK-SM) is a modern solution for the food retail markets. The AK-SM uses the latest technology to provide the maximum benefit to the end user, both in terms of energy saving optimization, control options and user friendly access.

AK-SM ensures a shift mode of operation in AK-CC case controllers:
Minimum Stable Superheat (MSS) or **Adaptive Liquid Control (ALC)** based on feedback from pack controller AK-PC.

Material specification

Housing:	Aluminium AW-6082 T6
Connections:	Stainless steel AISI 304
Ejectors:	Brass
Screws:	Stainless steel A2-70

Dimensions and weights

CTM 1

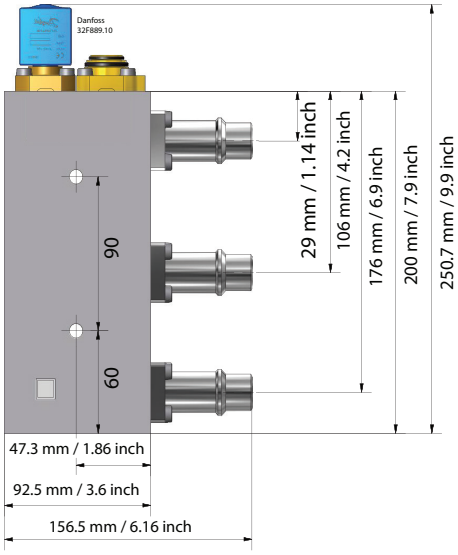

Weight: 2.6 Kg / 5.7 lb

CTM 2

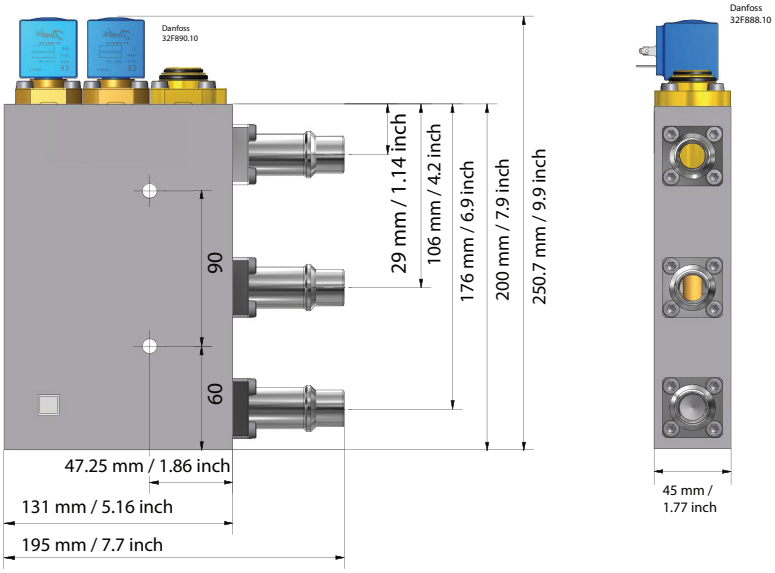

Weight: 3.6 Kg / 7.9 lb