ENGINEERING
TOMORROW

Installation guide

Solenoid coil for control in potentially explosive areas

Type BZ

018R9667

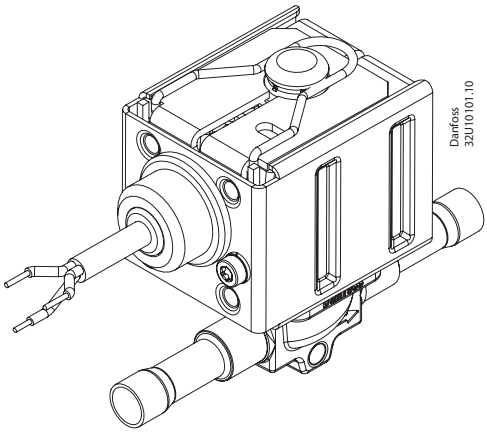

018R9667

1

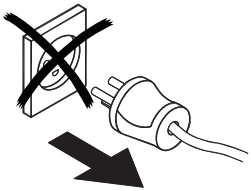

2

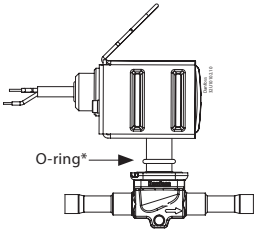

*Recommended to reduce vibrations.
Not required for sealing.

3

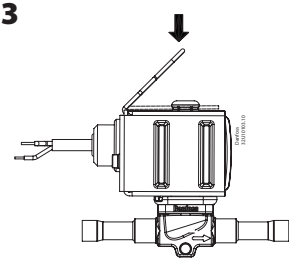

4

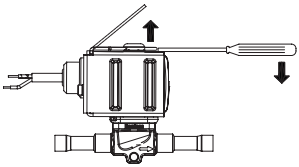

5

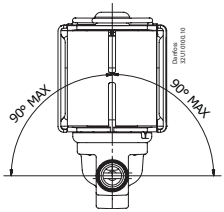

6

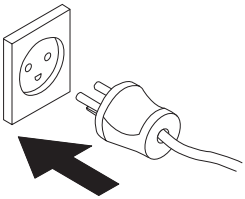

A

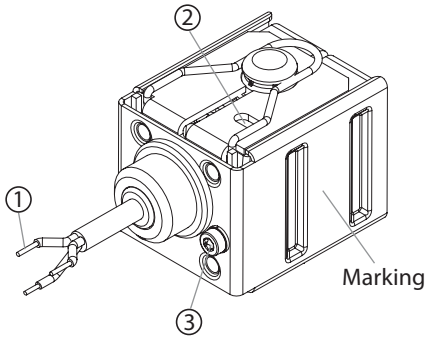

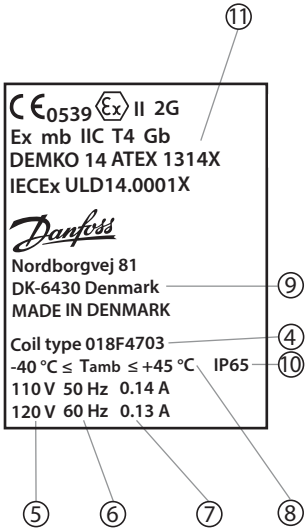

② Date of manufacturing

xxxx

Year

Week

B

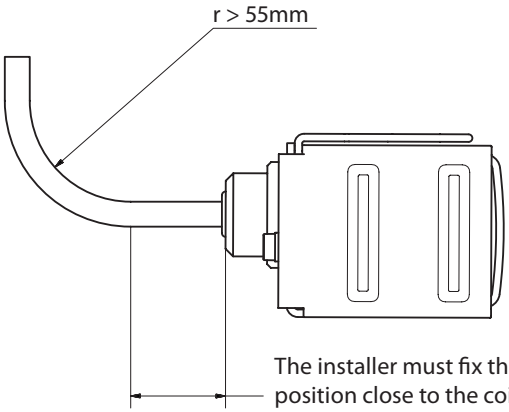

The installer must fix the cable in a position close to the coil to ensure that the first 20 mm cannot be bent.

Ⓐ Identification

① Green/Yellow cord for earthing
② Week and date of manufacturing
③ External earth terminal
④ Code number
⑤ Voltage
⑥ Frequency
⑦ Current
⑧ Ambient temperature range
⑨ Country of manufacturing
⑩ Enclosure
⑪ Approval/Certificate number

Description and approval

Solenoid valve for control in potentially explosive area.

Approval

EMC 2014/30/EU
ROHs 2011/65/EU

ATEX 2014/34/EU
Ex mb IIC T4 Gb
DEMKO 14 ATEX 1314X
IECEx ULD 14.0001X

The coil may only be installed with following valve combinations

- EVR NC 2 - 25
- EVRA(T) 3 - 25
- EVRS(T) 3 - 20
- EVRB
- EVRF
- EVM NC and EVM NO
- EV220B 6 - 22 NC
- EV220B 6 - 10 NO
- EV220B 15 - 50 NC
- EV250B
- EV251B
- EV222B
- EV224B
- EV227B

Application and specification

Nominal voltage	Frequency	Nominal current	Size of fuse in front of the coil	Ambient temperature	Media temperature	Permissible voltage variation	Code no.
[V]	[Hz]	[A]	[mA]	[°C]	[°C]	[%]	
24	DC	0.43	500	-40 – 45	-40 – 70	-10 – +5	**018F4705**
110 120	50 60	0.14 0.13	250	-40 – 45	-40 – 70	-10 – +6	**018F4703**
230 240	50 60	0.09 0.08	150	-40 – 45	-40 – 70	-10 – +6	**018F4704**

Ambient temperature	-40 – 45 °C	Polution degree	1+2+3 (EN60730-1)
Media temperature	-40 – 70 °C	Over voltage category	III (EN60730-1)
Humidity	0% < RH < 100%	Mode of operation	Type 1 action (EN60730-1)
Connection	3-core flexible cable 3 x 0.75 mm^2	Type of control	Incorporated control (EN60730-1)
External earth core	Minimum area > 4 mm^2	Protection against electrical shock	Class I (EN60730-1)
Weight exclude valve	0.4 kg exclude cable	Protection degree	IP65 (IEC 60529)

Safety instruction

All national safety regulations must be complied with in connection with installation, start-up and operation of Danfoss solenoid valve. Furthermore, the requirements of the declaration of conformity and national regulations for installation in explosion area. Disregarding such regulations involves a risk of serious personal injury or extensive material damage. Work in connection with the solenoid valve mentioned must be performed only by suitable qualified persons.

Basic safety and health requirements are fulfilled through compliance with:

- IEC60079-0, 7th Edition
- EN 60079-0: 2018
- IEC60079-18 4th Edition, EN60079-18: 2015

Installation, operation and maintenance

- Protect the coil against external impact
- Protect the coil against direct sunlight and other ultraviolet sources
- Disconnect the power before dismounting the coil
- An external fuse (standard DIN41571-2) is required to protect coils as follows:

  018F4703: 250 mA, 1500 A Breaking capacity, 250 V, Medium Time lag

  018F4704: 150 mA, 1500 A Breaking capacity, 250 V, Medium Time lag

  018F4705: 500 mA, 1500 A Breaking capacity, 250 V, Medium Time lag

  The Power supplying the solenoid must be limited to a prospective short circuit current of a maximum 1500 A
- Install the coil and cable according to EN60079-14
- The cable supplied with the solenoids must not be handled or flexed, and shall be protected against impact if the ambient temperature is below 0 °C
- Installation and handling of the cable shall be done at temperature above 0 °C
- The cable is only for fixed installation and the minimum bending diameter for fixed installation: r ≥ 55 mm (Ⓑ)
- The cable jacket material is PVC
- The cable operating temperature range is -40 – 90 °C
- The product is provided with a yellow/green PE wire as well as an external earth terminal. These shall not be used simultaneously.

  If the external earth connection is connected to earth or bonding system, the Y/G earth wire must be cut off, isolated and not connected. If the Y/G wire is connected to earth, the external earth terminal must be left without any connection. For the external earth terminal the size of the earth core shall be minimum 4 mm^2 and the installer shall use a suitable method e.g. crimp terminal to ensure secureness of the external earth connection. The screw for external PE shall be mounted with 1.2 Nm ± 0.2.The external earth conductors shall be physically secured close to the coil connection to ensure that the conductors cannot be readily loosened or twisted
- The end user must ensure the earthing of the coil is maintained
- Non-detachable cords method Z repairing not allowed. If the coil failed, it must be replaced by a new coil

In case of problems please contact:
Danfoss A/S
DK-6430 Nordborg
Denmark

Danfoss can accept no responsibility for possible errors in catalogues, brochures and other printed material. Danfoss reserves the right to alter its products without notice.This also applies to products already on order provided that such alterations can be made without subsequential changes being necessary in specifications already agreed.
All trademarks in this material are property of the respective companies. Danfoss and the Danfoss logotype are trademarks of Danfoss A/S. All rights reserved.